CPCPracticeSpotlight24

Comprehensive Primary Care is an initiative of the Center for Medicare & Medicaid Innovation

How Your Approaches to Improvement Strategies Also Builds Your Culture for Improvement

Utica Park Clinic, Tulsa, Oklahoma—Multi-Specialty (15 clinics); 131,000 patients

Oct. 3, 2014

This strategy addresses CPC Milestone 5, specifically Driver 3.2.

For more information about the CPC initiative, visit http://innovation.cms.gov/initiatives/Comprehensive-Primary-Care-Initiative/.

Situation: When leadership at **Utica Park Clinic** sought to implement a quality improvement (QI) methodology across its 17 CPC sites, the team quickly discovered that the best results emerge from engaged staff members who are confident in the process and see their contribution to the outcomes.

Strategy: In the Q&A below, **Jeff Galles, DO, medical director**, and **Verda Weston, director of care management,** share some lessons learned from building a culture focused on improvement across its clinics.

Q: How did you engage teams in QI?
A: We discovered that collaboration is the core of moving ahead. Our strategy is to use the "power of positive regard," meaning we are present in person, we listen and we reinforce the positive. Doing this removes resistance and defensiveness.

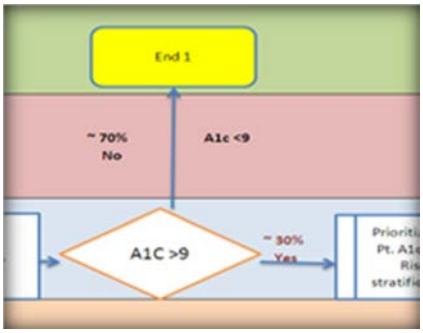

Follow this link to see examples of Utica Park's process mapping and QI activities on the Collaboration site.

One example is when we pulled data to track timely HgbA1cs on patients with diabetes, the data had gaps despite the staff assuring us all values had been documented. Working together with staff across clinics, we found data had indeed been reported but in the wrong field. The cause for this variation stemmed from inconsistent training during onboarding of medical assistants.

We brought the data to a staff meeting, acknowledged the work that had been done and then opened the discussion on how to improve the process to support accurate documentation. Involving them in the discussion built their ownership of the improvement process, from which a workflow refinement tool was created. Illustrated with screen shots, this quick reference guide is now in use across all clinics and in training. Our improvement in this measure can be partly attributed to the workflow refinement to accurately capture the work.

Q: Who do you engage at the beginning of an improvement project and why?
A: We brought in as many internal subject matter experts as available from the start. Harvesting institutional knowledge from our staff not only better informed our QI efforts, but it also validated our staff's valued input that shaped actionable, sustainable process improvements.

Q: What projects are ideal for helping to shape your QI culture?
A: Success with smaller projects helped build acceptance and confidence from our staff. Once their expertise broadened, we moved on to more complex or challenging processes.

For example, Utica started one QI project focusing on improving HgbA1c rates among patients with diabetes. Our first attempt to reach patients was basic: We mailed a letter that invited them to enhanced diabetes education with a care coordinator. Only a couple of patients responded. What we found was that our letter was ineffective because we didn't tell patients it was a free service, and our letter looked like we were selling something. Our barriers were patient skepticism and lack of detail.

We decided we could be more effective if we reached out to patients while they were in the clinic. We added a step in the pre-visit work flow that would alert the care coordinator when eligible patients were scheduled for an appointment. The care coordinator would speak to the patients and invite them to the education session. This simple change proved very effective; the face-to-face invite was more influential, and the care coordinator could answer any questions immediately. Our enrollment went up considerably.

With that success under our belt, we started looking at other aspects of the diabetes care management program that could be enhanced through improved communication methods. Over the course of several iterations, we've added follow-up calls and more frequent contacts with patients to better support their care management.

Q: Any tips for other practices?
A: Celebrate and share. When we make the connection between our projects and a result that affected a patient's life, it is a powerful testimony to others on our team that they can make a difference that matters to those they serve.

TMF Health Quality Institute

This material was prepared by TMF Health Quality Institute under contract **with** the Centers for Medicare & Medicaid Services (CMS), an agency of the U.S. Department of Health and Human Services. Any statements expressed by the individual and resources cited in this publication are not an opinion of, nor endorsement by, TMF or CMS.